NORTHERN WOLVES AIR CONDITIONING

SUBMITTAL TRANSMITTAL

Project:	Saddle River Day School	**Submittal No:**	029
Location:	147 Chestnut Ridge Rd., Saddle River, NJ 07458	**Spec Section:**	230529
Engineer:	Johnson & Urban, 295 Route 34 Colts Neck, NJ 07722	**Date:**	03/22/2026
Architect:	DIGroup Architecture	**Project No:**	DIG #22.036

EQUIPMENT/MATERIAL SUBMITTED:

Pipe hangers and supports for all suspended HVAC piping systems per M-002 Mechanical Specifications. Hangers shall be of the clevis, pipe roll, and pipe clamp types. Hangers shall be FNW or equal. Support spacing per M-002: horizontal piping 1-1/4" and smaller not more than 6' O.C., piping 1-1/2" and larger supported not more than 10' O.C., copper tubing not more than 8' O.C.

HANGER TYPES — Per M-002 'Hangers' Section:

Hanger Type	Product	Application	Material
Clevis Hanger	FNW 7009Z or Equal	Suspended Pipe (all sizes)	Carbon Steel, Zinc Plated
Pipe Roll	FNW or Equal	Horizontal runs w/ movement	Carbon Steel, Zinc Plated
Pipe Clamp	FNW or Equal	Vertical risers / fixed points	Carbon Steel, Zinc Plated
Insulation Shield	B-Line Snop-N-Shield	All insulated piping	Polypropylene, UL ASTM E-84

SUPPORT SPACING — Per M-002:

Pipe Size	Max Spacing	Pipe Material	Notes
1-1/4" & Smaller	6'-0" O.C.	All Types	M-002 Hanger Note C
1-1/2" & Larger	10'-0" O.C.	Steel Piping	M-002 Hanger Note C
All Copper Tubing	8'-0" O.C.	Copper	M-002 Hanger Note C

PIPE SLEEVES — Per M-002:

Component	Material	Size	Standard
Interior Wall Sleeves	Steel Type E, Grade A, Sch 40	Galvanized, Plain Ends	ASTM A53
Sleeve Length	Equal to Wall Thickness	Per M-002	Fill annular space w/ grout

HANGER RODS — Per M-002 & MSS SP-58:

Pipe Size Range	Min. Rod Diameter	Material
Up to 2"	3/8" Threaded Rod	Carbon Steel, Zinc Plated
2-1/2" to 4"	1/2" Threaded Rod	Carbon Steel, Zinc Plated
5" to 8"	5/8" Threaded Rod	Carbon Steel, Zinc Plated

PROJECT-SPECIFIC COMPLIANCE NOTES (Per M-002):

- Hangers shall be of the clevis, pipe roll, and pipe clamp types per M-002
- FNW or equal hanger products (M-002 Hanger Note)
- Horizontal piping 1-1/4" & smaller: max 6' O.C. spacing (M-002)
- Horizontal piping 1-1/2" & larger: max 10' O.C. spacing (M-002)
- Copper tubing: max 8' O.C. spacing (M-002)
- Pipe shield for clevis hangers: B-Line Snop-N-Shield, polypropylene, UL classified ASTM E-84 (Spec 230529)
- Rods of suitable length and diameter to adequately support piping (M-002)
- Pipe sleeves through interior walls: Steel Type E, Grade A, Schedule 40, galvanized (M-002)
- Pipe sleeves passing through exterior walls: same as interior, with additional waterproofing
- All hangers and supports shall be galvanized (M-002 Note 26)
- Compliant with MSS SP-58, SP-69 per Section 230529

NOTES:

Per M-002: Hangers shall be of the clevis, pipe roll, and pipe clamp types. Hangers shall be FNW or equal. All horizontal piping 1-1/4" and smaller not more than 6' on centers. All piping 1-1/2" and larger shall be supported not more than 10' on centers, except that

copper tubing shall not be more than 8' on centers. Rods of suitable length and diameter to adequately support piping. Pipe sleeves through interior walls shall be steel Type E, Grade A, Schedule 40, galvanized, plain ends.

DRAWING REFERENCES:
M-002 Mechanical Specifications (Hangers Notes A-F, Piping Notes), Spec Section 230529

Submitted By: Northern Wolves Air Conditioning
Email: ruslan@northernwolvesac.com

FIGURE 7009Z
HANGERS

PLATED STANDARD CLEVIS HANGER W/ 12" SHIELD

FEATURES

- Size Range: 2"–8"
- Material: Carbon steel
- Finish: Zinc plated
- Approvals: MSS SP-58 Type 1
- Federal specification WW-H-171
- Manufactured silicone free

Catalog Number	Pipe Size		Bolt Size	RS	A		H		CL		ID		L	
	in.	mm		(Rod Size)	in.	mm	in.	mm	in.	mm	in.	mm	in.	mm
FNW7009Z0200	2	60.3	1/4-20UNC	3/8	3/8	9.7	4-1/2	114.3	2-7/8	73	2-7/16	62.3	12	305
FNW7009Z0250	2-1/2	73.0	3/8-16UNC	1/2	3/8	9.7	5-1/4	132.7	3-1/2	88.2	3	75.0	12	305
FNW7009Z0300	3	88.9	3/8-16UNC	1/2	1/2	12.3	6	152.6	4-1/8	105.1	3-5/8	91.4	12	305
FNW7009Z0350	3-1/2	101.6	3/8-16UNC	1/2	5/8	15.5	6-5/8	167.8	4-5/8	117.3	4	104.1	12	305
FNW7009Z0400	4	114.3	3/8-16UNC	5/8	1	24.5	7-5/8	192.0	5-1/8	130.8	4-5/8	117.3	12	305
FNW7009Z0500	5	141.3	1/2-13UNC	5/8	1-1/8	28.9	9-3/8	237.8	6-1/2	164.5	5-11/16	144.8	12	305
FNW7009Z0600	6	168.3	1/2-13UNC	3/4	1-3/16	30.7	10-3/4	272.3	7-11/16	195.3	6-3/4	172.3	12	305
FNW7009Z0800	8	219.1	5/8-11UNC	3/4	1-7/16	36.4	13-1/8	333.4	9-11/16	245.4	8-13/16	224.1	12	305

Catalog Number	Design Load	Weight	Shield ID		Shield Gauge	Shield Size
	lbs	lbs	in.	mm		
FNW7009Z0200	610	0.97	2.38	60.4	18	2
FNW7009Z0250	1130	1.39	2.88	73.2	18	2-1/2
FNW7009Z0300	1130	1.70	3.5	88.9	18	3
FNW7009Z0350	1130	1.90	4	101.6	18	3-1/2
FNW7009Z0400	1430	2.36	4.52	114.7	18	4
FNW7009Z0500	1430	3.42	5.31	135.0	18	5
FNW7009Z0600	1940	5.58	6.66	169.1	16	6
FNW7009Z0800	2000	7.67	8.7	220.9	16	8

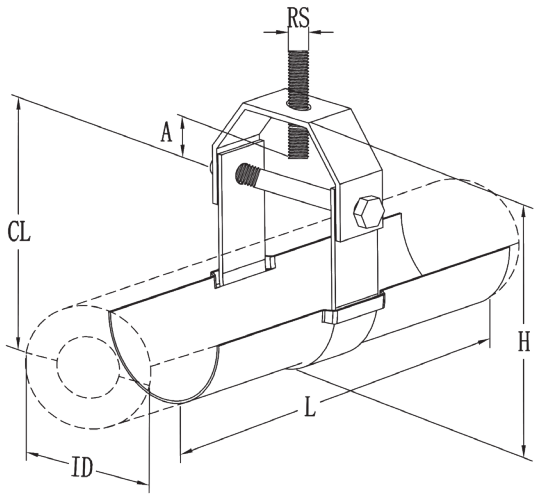

©2023 Ferguson Enterprises, LLC 1123 6013843

We reserve the right to modify or improve the designs or specifications of our products at any time without notice.